Ventilation Planning

- [sketch] Ventilation Planning - gym window roof fan
- [sketch] Ventilation planning - gym window 2x duct
- Measurements and Supplies
- [sketch] MVP ventilation

[sketch] Ventilation Planning - gym window roof fan

The models screenshotted here exist as a sketchup file in my account. Can't attach bc too big, but can hand off to anyone directly. (~LP)

Overview

Shows basement below, and rough outline of gym space.
Weird curved thing up top is the manifold/cowl for the existing large fan above gym.

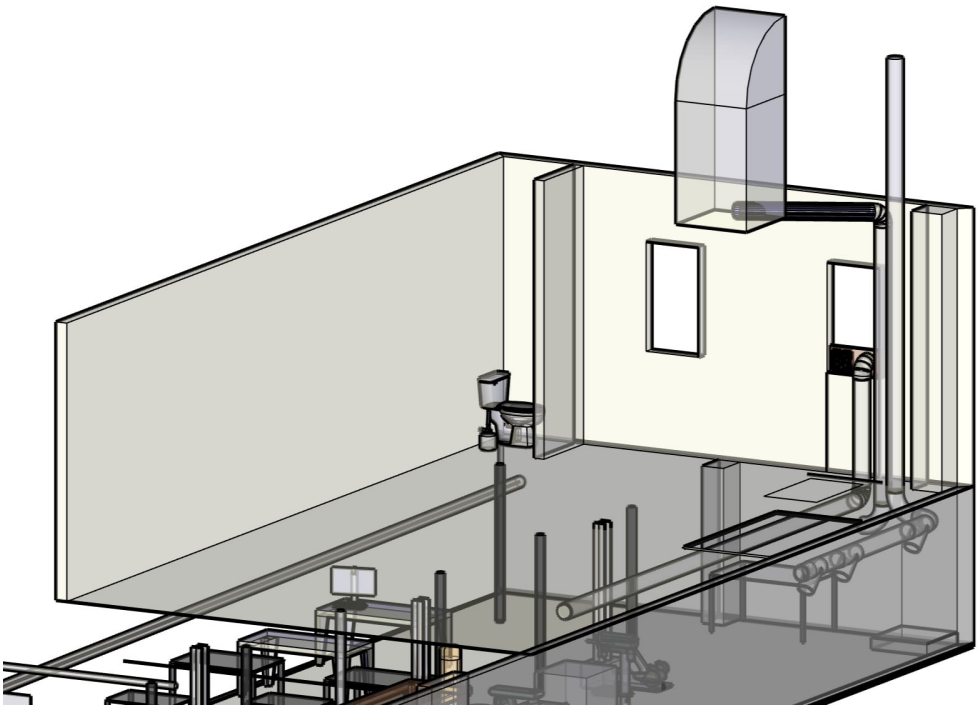

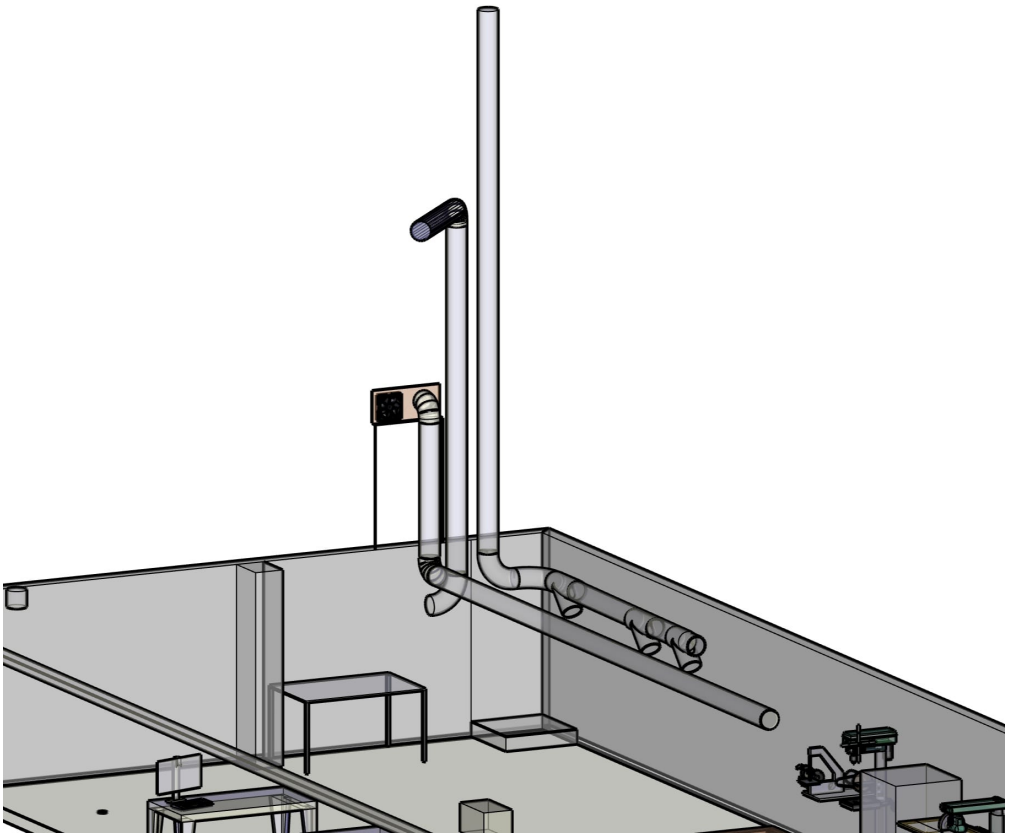

Basic idea is three channels.

1. Toxic out via existing roof pipe (all rigid pipe, leak tested on regular basis, not "hot swappable", maybe lower CFM.
2. Coffee & general air out via existing fan manifold, maybe draws from woodshop, higher CFM.
3. Fresh air in from gym window, higher CFM, with exit in center of space

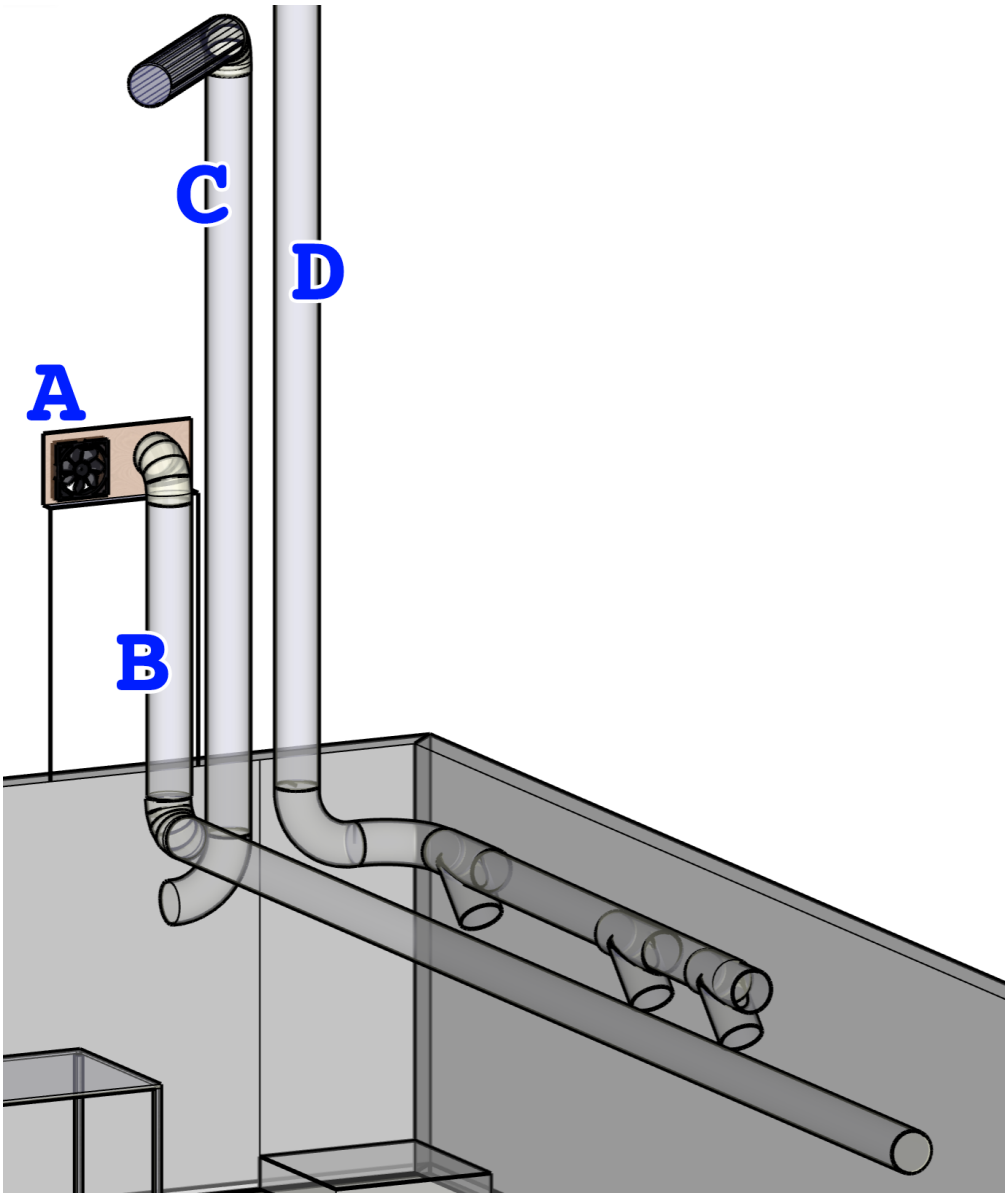

A) Optional add-on for gym, variable speed fresh air intake biscuit fan
B) Clean air intake via 4" hole in floor
C) Coffee+ high CFM output via another 4" hole in floor, and then through gym fan manifold, but probably just using it as a pathway, not relying on gym fan itself
D) Toxic out

We have exactly enough straight conduit to do this.
We don't have elbows, Ts, blast gates
Not sure how and what fans are used for different lines

Concerns have been expressed about 4" round being enough.
Maybe possible to bump to 6", maaaaaybe 8", but gets trickier re: finding cheap blowers, and becomes more obtrusive to gym space. Not my area of expertise, but I think 4" with proper blowers is workable.

Apparently "pulling" air is more efficient, so intake blower would be in basement, non-toxic outflow could be mounted in fan manifold, and toxic out we'd probably eat the inefficiency vs mounting fan

on roof exposed to elements.

Gym coordination

Sent this mockup to gym for input 9/12/26

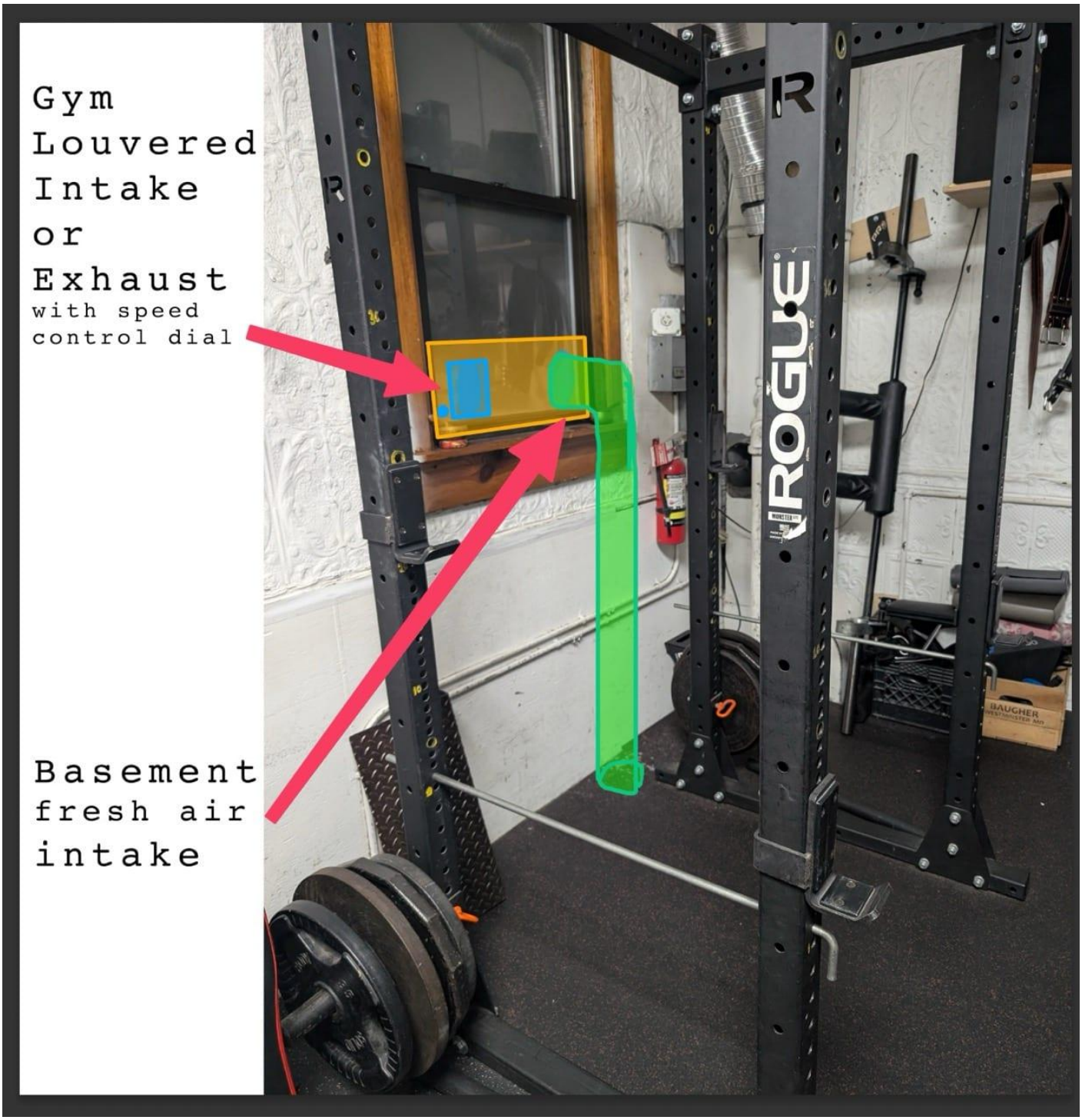



Basement intake would have a hood on the outside.
Gym fan would have louvers (and maybe a hood too), so it "closes" when not on. Could have additional considerations like an insulated cover for winter. Added the gym fan as a sort of "perk for us, perk for you" not sure if it's wanted, but figure it might be nice to have a "fresh air draft" option along with AC. Probably not reversable, but could be set up either

[sketch] Ventilation planning - gym window 2x duct

The sketch here was objected to by at least some gym folks because it interferes with space behind squat rack.

To avoid:

- Interfering with squat rack
- longer routing to ceiling fan housing
- creating opening on roof that will require care and occasional inspection to ensure it doesn't leak

We can maybe route through the exiting vertical square duct, but then exit from the side, to a panel mounted in *upper* gym window vs lower.

The big picture

- *bad* outgoing air (roasting)
  - From rear
  - Lower CFM, distance or indirect pull for heat
  - Possibly insert oil/particle capture w/ electrostatic/washable filter or cut to size filter cloth
- toxic outgoing air
  - From rear
  - Higher CFM, with hood
- Incoming air
  - Higher CFM
  - No truly easy or permanent entrance, hatch is easiest
  - large blower is dual 4", ducting can be reversed if's used for incoming
  - In interim, can be used for high volume pull

Having 2 outflows will I guess create negative pressure in space, and pull air from 1st FL

Measurements and Supplies

Roof pipe being used for roasting venting

76 ID
88.5 OD

Candidate blower for MVP exhaust: https://www.grainger.com/product/DAYTON-Blower-3-7-8-in-Wheel-Dia-42NL22

[sketch] MVP ventilation

Rear - Outflow

~~50 CFM outflow from rear via dedicated $100 blower.~~

It turns out a more standard blower is probably not ideal for the high static pressure of a 3" pipe run.

A radon fan may be more suitable, at a slight increase in purchase cost and running cost.

Main radon fan manufacturers appear to be RadonAway & Fantech, some options:

Leaning towards Festa AMG Triumph ECS

Table of fan comparisons

Exhaust fan options: 3" iron pipe, ~20 ft vertical, 2–3 × 45°, open top

Annual cost = max rated watts × 8,760 h × $0.29/kWh (Con Ed residential, 2026). Commercial accounts run ~15–25% lower.
"Est. on pipe" = estimated operating point on this run, using SP ≈ 1.15" × (CFM ÷ 100)². Rough calculation, not measured.
Values marked ~ are my estimates where the maker publishes no number. "—" = not published / not found.
dB figures are maker estimates with no stated distance or conditions; compare within a brand, not across brands.

Model	Type	Price seen	Max W	Annual cost, full tilt	CFM @ 0"	CFM @ 0.5"	CFM @ 1.0"	CFM @ 1.5"	CFM @ 2.0"	Max SP	Est. on pipe (full speed)	dB (maker est.)	Max air temp	Speed control	Ports	Motor / service
Scroll blowers (motor outside airstream)																
Dayton 42NL22 (current)	FC scroll blower	$97.23 Grainger $79.99 Zoro	~52	~$132	75	62	0	—	—	1.0"	~55 CFM	not rated	104°F	No (not rated)	2-1/8" round flange	Outboard motor; housing opens
Dayton 1TDP5	FC scroll blower	$79.99 Zoro	~75	~$190	131	105	—	—	—	—	~75 CFM	not rated	104°F	No (not rated)	Square flange	Outboard motor; housing opens
Dayton 1TDV2	FC scroll blower, high-temp	$175.81 PartsSource $119.95 interchange	~75	~$190	129	91	—	—	—	—	~80–90 CFM	not rated	450°F inlet (motor ambient 104°F)	No (not rated)	Rectangular	Outboard motor; housing opens
Radon fans, fixed speed (AC motor in airstream)																
RadonAway RP145	Inline radon fan	—	72	~$183	166	126	82	41	3	2.1"	~90 CFM	30 (listed)	check spec	No	4"	Motor in airstream; sealed
RadonAway GP501	Inline radon fan, high pressure	$270 HVACQuick	146	~$371	—	—	95	—	—	4.2"	~105–110 CFM	—	check spec	No	3"	Motor in airstream; sealed
Fantech Rn2	Inline radon fan	$185.90 HVACQuick	58	~$147	160	120	80	40	—	1.97"	~85–90 CFM	25 (listed)	check spec	No	4.5" (needs reducer)	Motor in airstream; welded housing
Fantech Rn3	Inline radon fan	—	141	~$359	370	280	180	120	50	2.36"	~110–115 CFM	—	check spec	No	6" (needs reducer)	Motor in airstream; welded housing
Festa AMG Eagle Extreme EC	Inline radon fan, EC (no "S")	—	170	~$432	304	275	248	215	179	5.0"	~145 CFM	70–75	check spec	Likely no	3"	Motor in airstream; sealed

Radon fans, EC variable speed (motor in airstream)																
Fantech Rn4EC-3	EC, dial + 0–10 V	$365.90 Home Depot $392.99 HomElectrical $447 HVACDirect	173	~$439	210 @ 0.2"	~200	~185	~170	~150	4.5"	~140 CFM (~110 @ 80%, ~85 @ 60%)	—	check spec	Yes: dial or 0–10 V input	~6"; 6×3" couplings included	Motor in airstream; welded housing
Fantech Rn2EC	EC, dial	—	53	~$135	175	~120	~80	~40	—	1.99"	~85–90 CFM	—	check spec	Yes: dial	4.5" (3" or 4" couplings)	Motor in airstream; welded housing
Festa AMG Surge ECS	EC, dial; high-static	$244 Festa	110	~$280	185	—	—	—	—	3.4"	~110 CFM (rough)	50–60	check spec	Yes: dial	3"	Motor in airstream; sealed
Festa AMG Prowler ECS	EC, dial	$294 Festa (sold out)	85	~$216	163	—	—	—	—	3.25"	~100 CFM (rough)	60–70 @ max	check spec	Yes: dial	3"	Motor in airstream; sealed
Festa AMG Phoenix ECS	EC, dial	$234 Festa	—	—	210	—	—	—	—	3.15"	~110–115 CFM (rough)	50–55	check spec	Yes: dial	4"	Motor in airstream; sealed
Festa AMG Maverick ECS	EC, dial	$267 Festa	65	~$165	183	—	—	—	—	2.55"	~100 CFM (rough)	60–65 @ max	check spec	Yes: dial	4"	Motor in airstream; sealed
Festa AMG Hawk ECS	EC, dial	$273 Festa	65	~$165	290	—	—	—	—	2.45"	~115 CFM (rough)	60–65 @ max	check spec	Yes: dial	6"	Motor in airstream; sealed
Festa AMG Legend ECS	EC, dial	$302 Festa (sold out)	85	~$216	295	—	—	—	—	2.9"	~120 CFM (rough)	60–70 @ max	check spec	Yes: dial	6"	Motor in airstream; sealed
Festa AMG Triumph ECS	EC, dial	$239 Festa	110	~$280	370	—	—	—	—	2.9"	~125–130 CFM (rough)	50–55	check spec	Yes: dial	6"	Motor in airstream; sealed

"(rough)" estimates: fan curve approximated as a straight line from max flow at 0" to zero flow at max SP. Checked against fans with published curves (Eagle Extreme, Rn2), this lands within ~5%. Festa publishes full curves as images on each product page; read those for better numbers.

Festa ECS notes: all have a speed potentiometer inside the terminal box, 7-year warranty. "Installation Kit" variants cost the same as fan-only and include 2 Fernco couplers (fit 3" or 4" pipe), a U-tube manometer, line cord and labels. Festa sells direct and ships from PA.

Rn4EC-3 published points (3" duct, HVI): 100%: 36 CFM @ 4.5" (146 W), 210 CFM @ 0.2" (173 W). 80%: 29 CFM @ 3.19" (88 W), 180 CFM @ 0.2" (126 W). 60%: 20 CFM @ 1.75" (40 W), 130 CFM @ 0.2" (57 W). Mid-curve values in the table are estimated from these points.

Eagle Extreme EC full curve: 0": 304 / 0.5": 275 / 1.0": 248 / 1.5": 215 / 2.0": 179 / 2.5": 134 / 3.0": 103 / 3.5": 89 / 4.0": 67 / 4.5": 37 / 4.75": 22 CFM.

System pressure for this pipe (SP ≈ 1.15" × (CFM÷100)²): 50 CFM ≈ 0.3" / 75 ≈ 0.65" / 100 ≈ 1.15" / 125 ≈ 1.8" / 150 ≈ 2.6". Add ~0.1–0.2" for grease filter, tent, couplings.

Noise vs speed (fan law): 80% speed ≈ −5 dB, 60% ≈ −11 dB, 50% ≈ −15 dB.

Notes for coffee roasting exhaust (1 kg electric, tented):
- Measure air temp at the fan inlet during the darkest roast. Above ~104°F, only the 1TDV2 is rated for it.
- Oil residue condenses as smoke cools. Scroll blowers can be opened and cleaned; radon fans are sealed and effectively consumable in this use.
- Use a washable mesh/baffle grease filter at the tent outlet.
- Fan at the top (pulling) keeps the iron pipe under suction, so leaks in the ceiling space draw air in rather than leaking smoke out.
- Add a cleanout/drip cup at the bottom of the vertical run.
- EC fans: set speed only with the built-in dial or control input, never with a wall dimmer or triac speed control.

Exhaust fan options: 3" iron pipe, ~20 ft vertical, 2–3 × 45°, open top

Annual cost = max rated watts × 8,760 h × $0.29/kWh (Con Ed residential, 2026). Commercial accounts run ~15–25% lower. "Est. on pipe" = estimated operating point on this run. "—" = not published / not found.

Rn4EC-3 rated points (3" duct): 100%: 36 CFM @ 4.5" (146 W), 210 CFM @ 0.2" (173 W). 80%: 29 CFM @ 3.19" (88 W), 180 CFM @ 0.2" (126 W). 60%: 20 CFM @ 1.75" (40 W), 130 CFM @ 0.2" (57 W).

Notes for coffee roasting exhaust (1 kg electric, tented):
- Measure air temp at the fan inlet during the darkest roast. Above ~104°F, only the 1TDV2 is rated for it.
- Oil residue condenses as smoke cools. Scroll blowers can be opened and cleaned; radon fans are sealed and effectively consumable in this use.
- Use a washable mesh/baffle grease filter at the tent outlet.
- Fan at the top (pulling) keeps the iron pipe under suction, so leaks in the ceiling space draw air in

rather than leaking smoke out.
- Add a cleanout/drip cup at the bottom of the vertical run.
- Est. on-pipe figures are rough calculations, not measurements.

Reduces roasting impact, improves CO2 and VOC reduction.

Front - Inflow/Outflow switchable

Big dust collection blower near hatch.
With longer hoses on in/out, could swap between inflow/outfow.
Hose can hook on to 1/2 opened hatch door.
Would be better with ducting, but routing past electrical panel and lift would be difficult.

Inflow

Set up for inflow, would work in tandem with rear exhaust.

Outflow

Set up for exhaust, could make the front area suitable for painting/staining.
Would benefit from cordoning off area to avoid drafts to upstairs or rest of basement.
Probably doesn't need to be entirely enclosed to help.

Next Steps

To improve outflow from rear, add additional exhaust:

- ...via 4-6" round conduit, routed through gym square duct and window
- ...vita large diameter duct through 1st floor mainspace bathroom, to roof. (Could have inline register in bathroom)

To improve incoming airflow from front, add additional incoming ducting:

- ...from right front facade window upper sash panel, routed to basement via duct tucked into the corner