The models screenshotted here exist as a sketchup file in my account. Can't attach bc too big, but can hand off to anyone directly. (~LP)

Overview

Shows basement below, and rough outline of gym space.
Weird curved thing up top is the manifold/cowl for the existing large fan above gym.

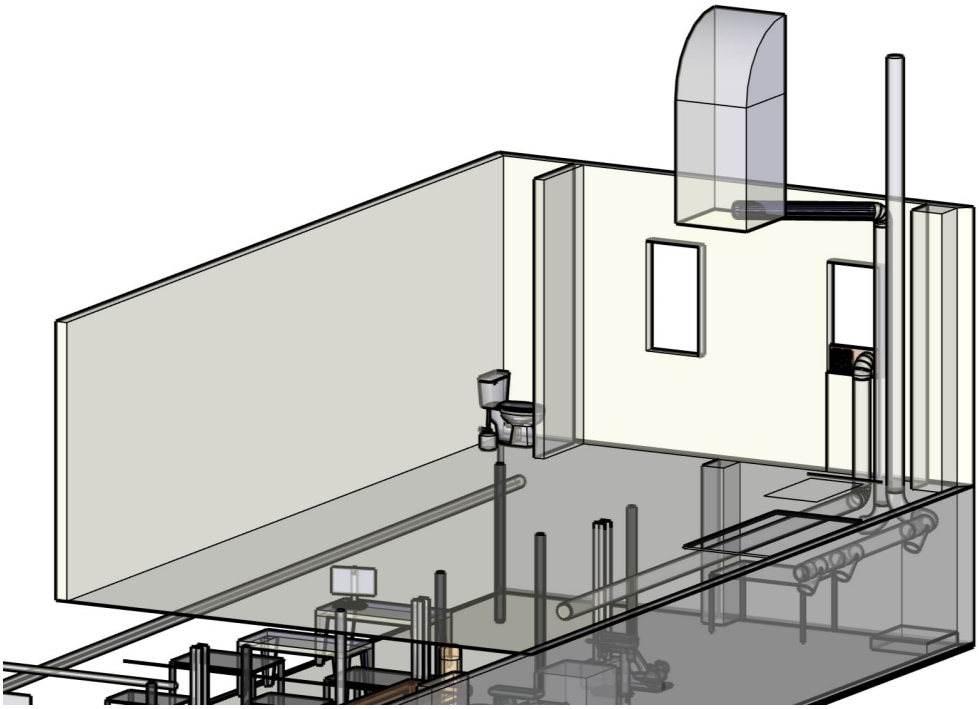

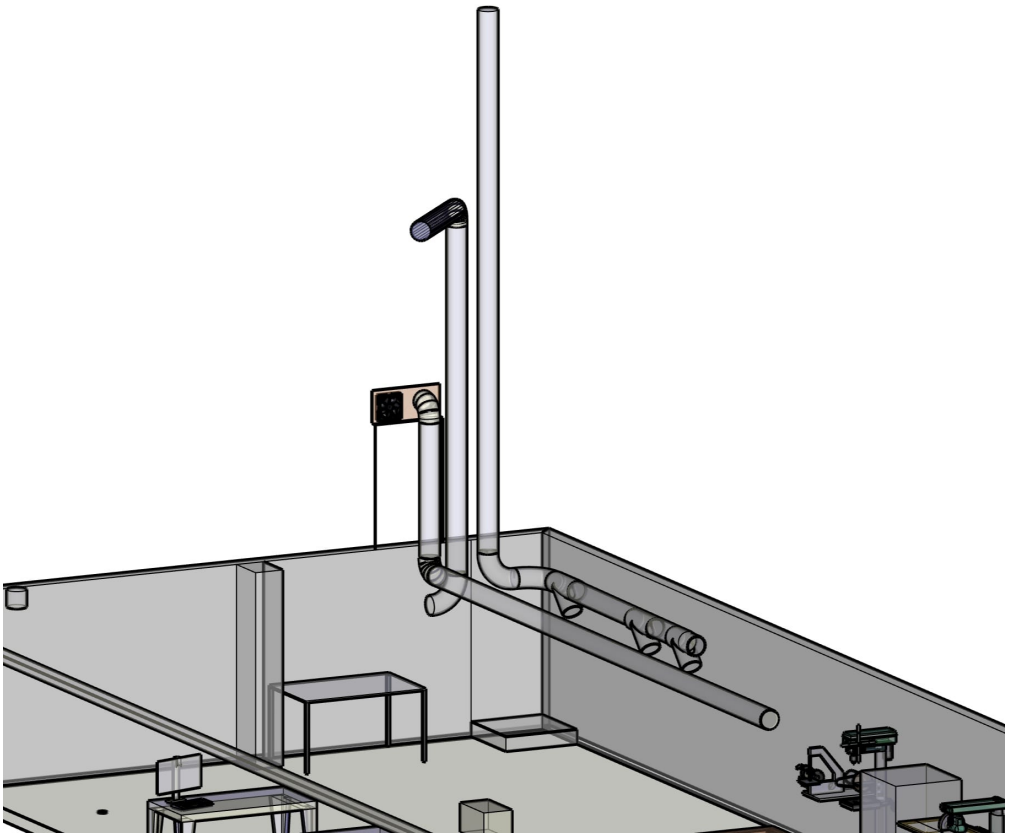

Basic idea is three channels.

1. Toxic out via existing roof pipe (all rigid pipe, leak tested on regular basis, not "hot swappable", maybe lower CFM.
2. Coffee & general air out via existing fan manifold, maybe draws from woodshop, higher CFM.
3. Fresh air in from gym window, higher CFM, with exit in center of space

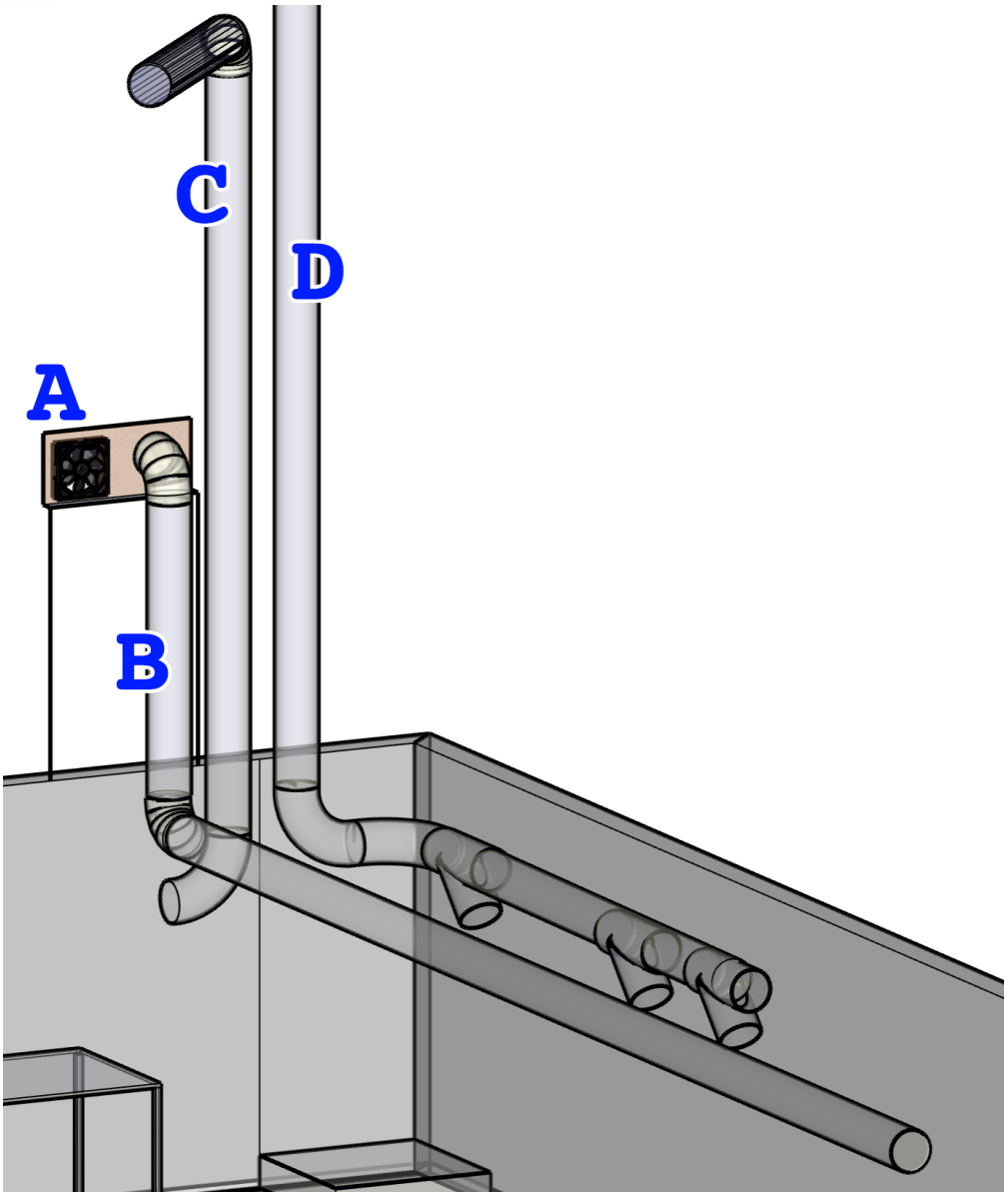

A) Optional add-on for gym, variable speed fresh air intake biscuit fan
B) Clean air intake via 4" hole in floor
C) Coffee+ high CFM output via another 4" hole in floor, and then through gym fan manifold, but probably just using it as a pathway, not relying on gym fan itself
D) Toxic out

We have exactly enough straight conduit to do this.
We don't have elbows, Ts, blast gates
Not sure how and what fans are used for different lines

Concerns have been expressed about 4" round being enough.
Maybe possible to bump to 6", maaaaaybe 8", but gets trickier re: finding cheap blowers, and becomes more obtrusive to gym space. Not my area of expertise, but I think 4" with proper blowers is workable.

Apparently "pulling" air is more efficient, so intake blower would be in basement, non-toxic outflow could be mounted in fan manifold, and toxic out we'd probably eat the inefficiency vs mounting fan

on roof exposed to elements.

Gym coordination

Sent this mockup to gym for input 9/12/26

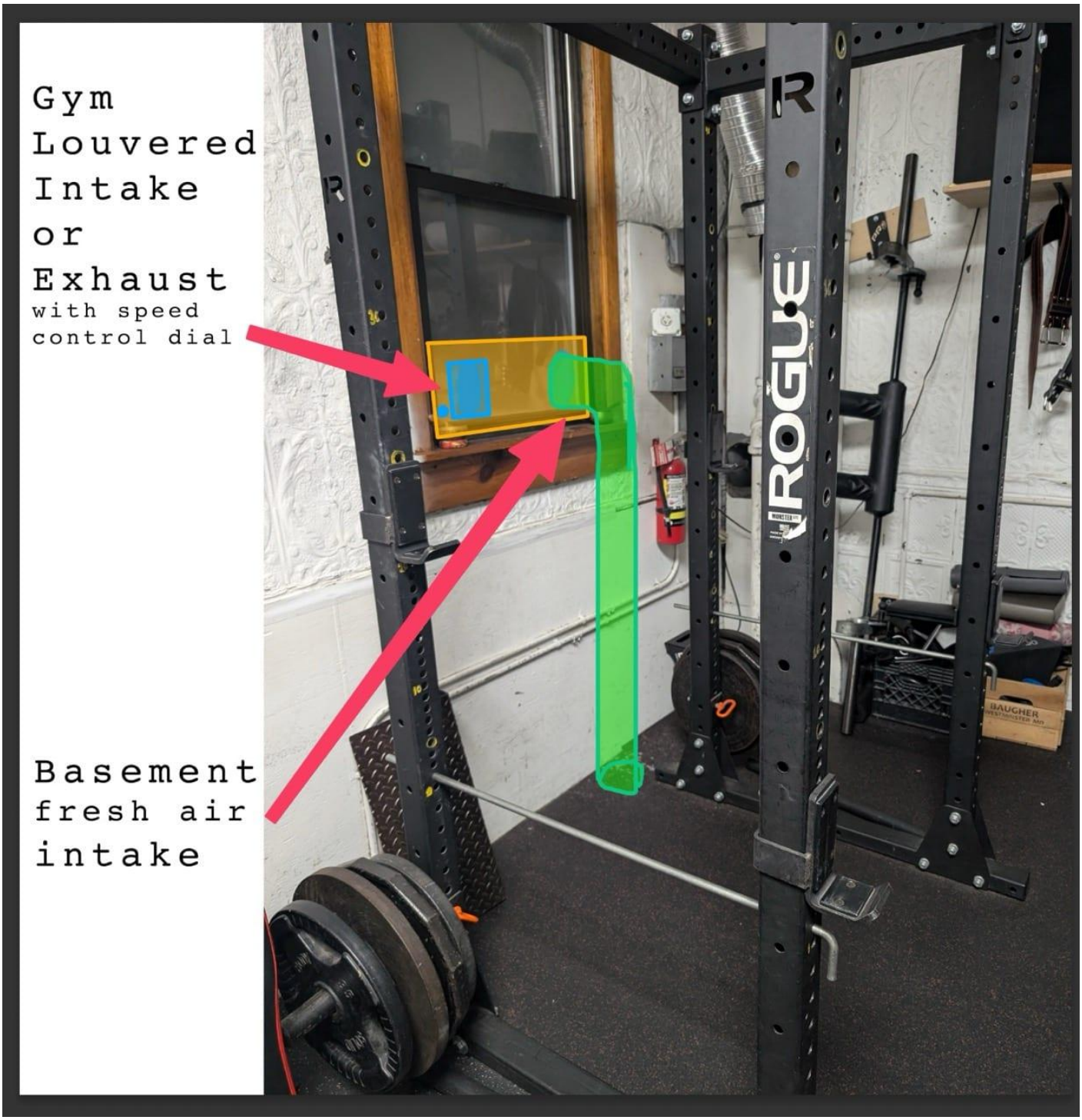

Basement intake would have a hood on the outside.
Gym fan would have louvers (and maybe a hood too), so it "closes" when not on. Could have additional considerations like an insulated cover for winter. Added the gym fan as a sort of "perk for us, perk for you" not sure if it's wanted, but figure it might be nice to have a "fresh air draft" option along with AC. Probably not reversable, but could be set up either