585 Maps

- 585 Plumbing Map
- 1st Floor Maps

585 Plumbing Map

This page documents the path of the large sewer drain through the basement as well as all the plumbing attached to it.

Short URL to this page: https://tinyurl.com/585plumbingmap

Building view



2nd and 3rd floor are residential rentals.

Ridgewood Commons occupies 1st floor and basement.

No information on sink/shower hookup locations for 2nd/3rd floors.
Rear of building roof is used as outdoor patio for 2nd floor renters.

Mains entry

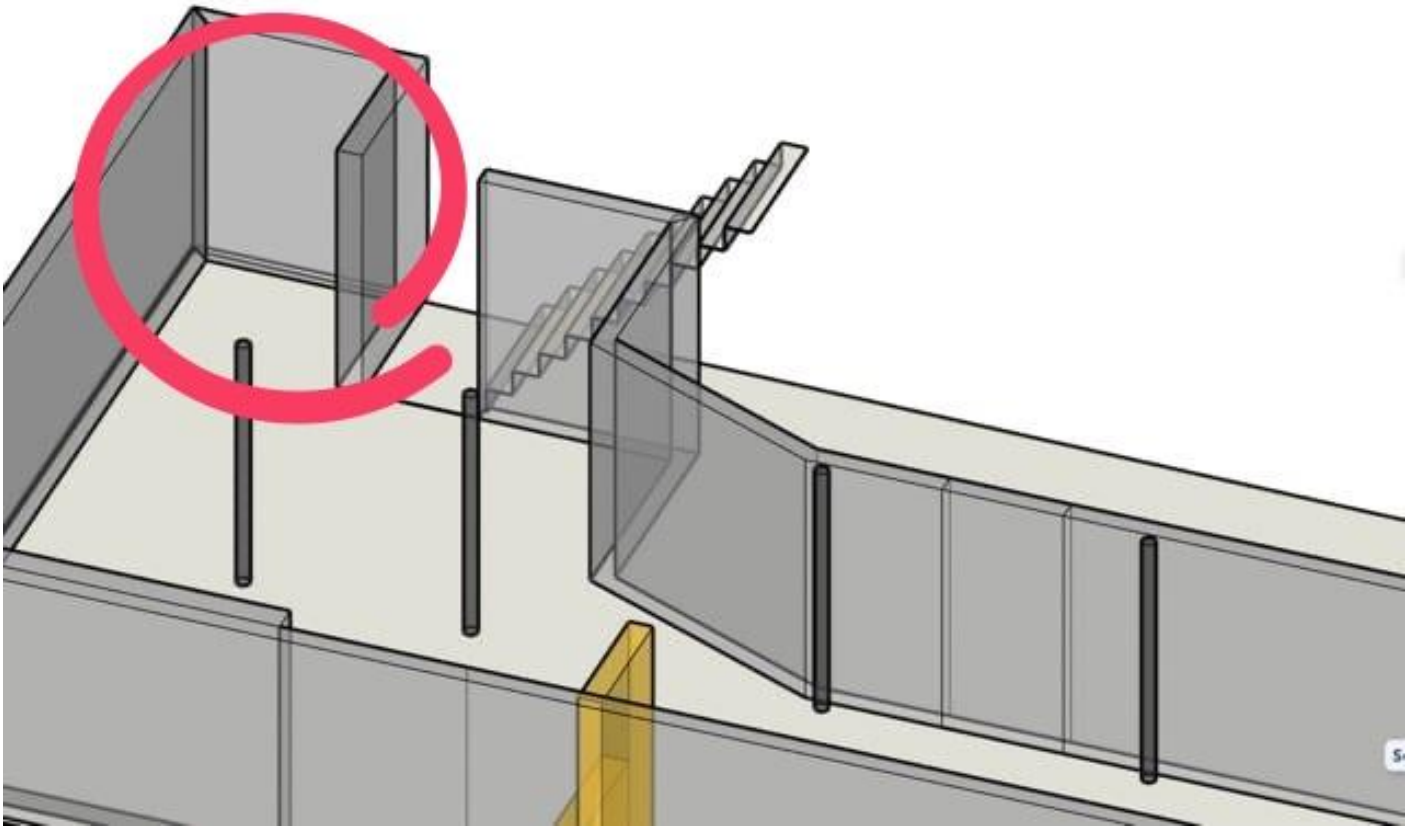



Stairway portion

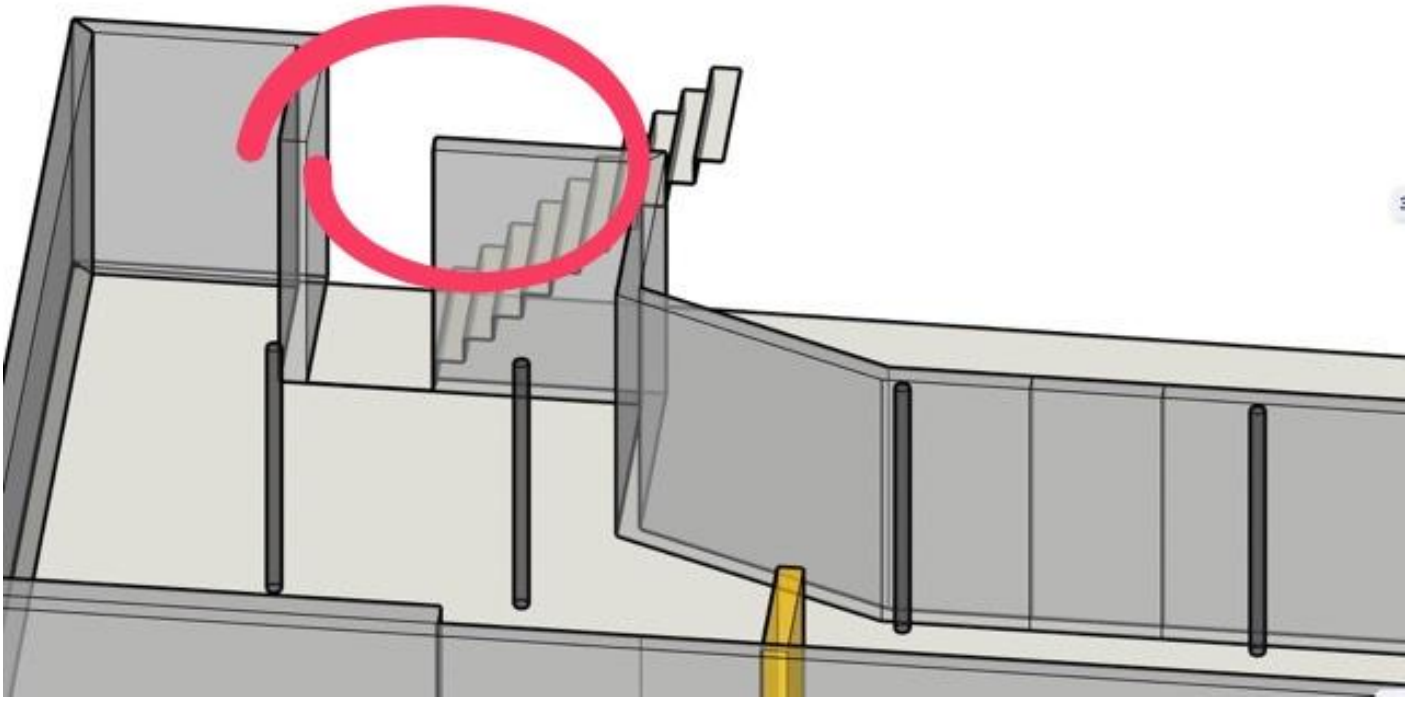



Boiler room portion

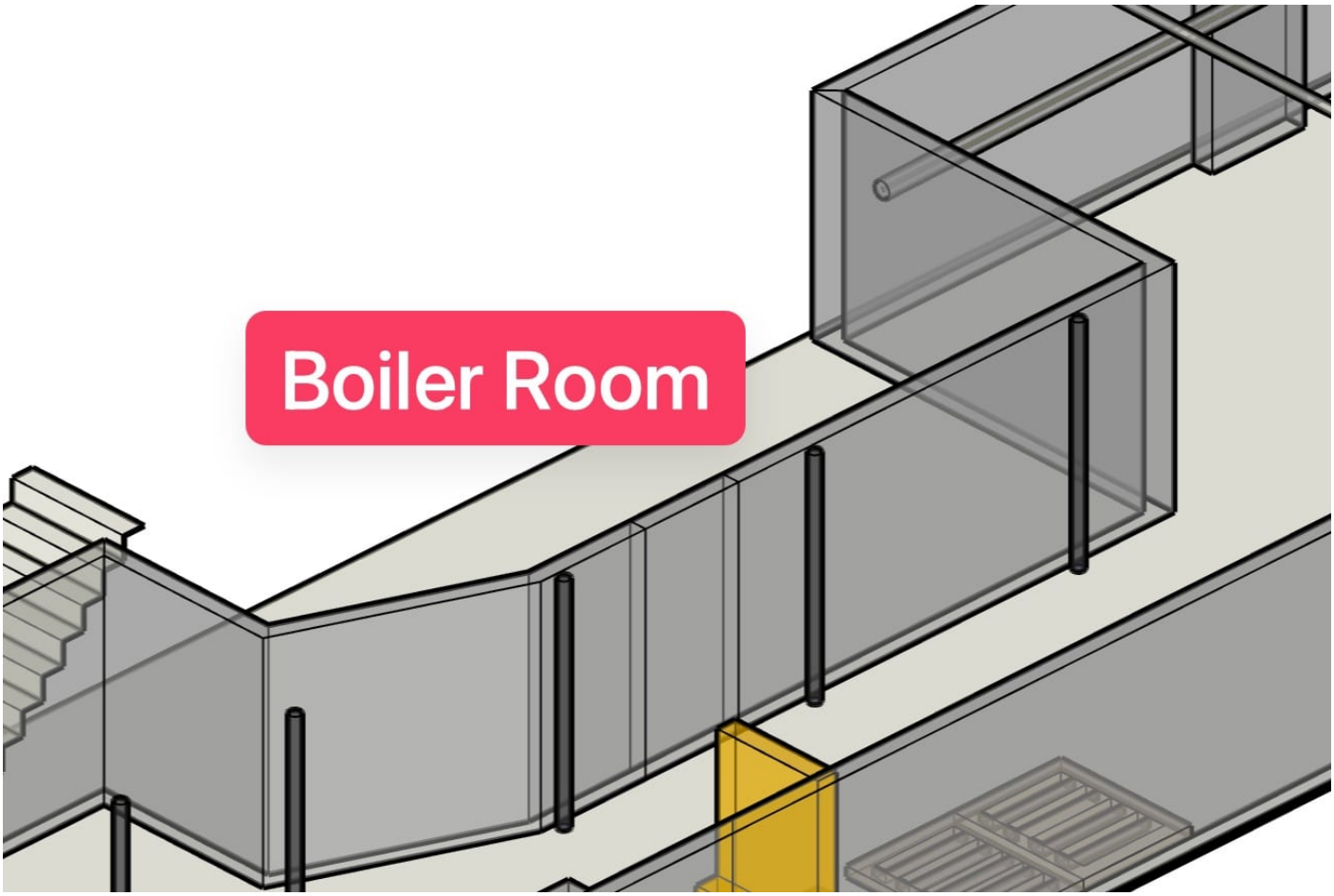
Boiler Room


STEAMAX


NATURAL GAS
A.O. Smith
NATURAL GAS


goes to ?
goes to ?

Leftover hookup from previously installed bathroom (also has capped hot/cold supply lines nearby)

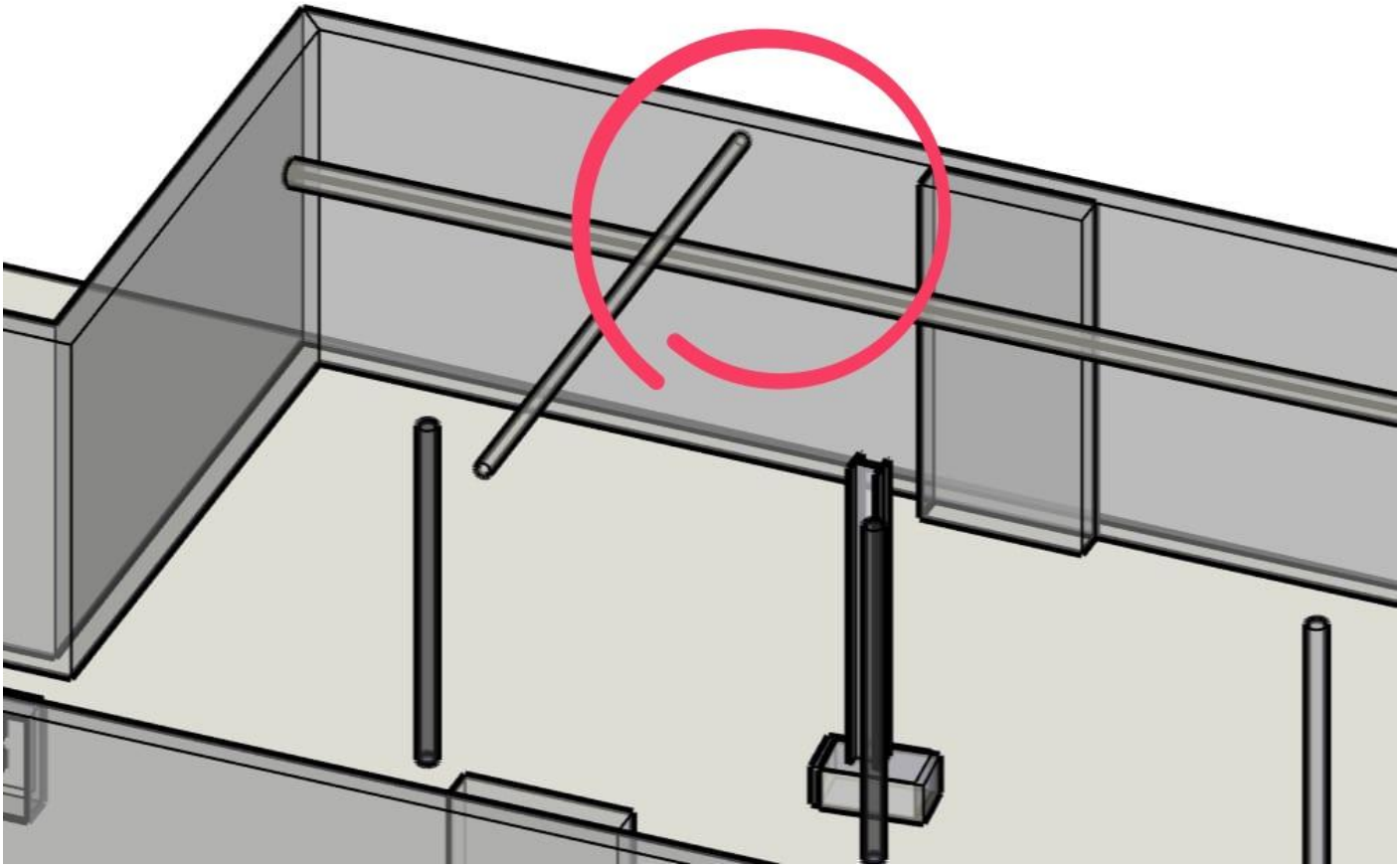



Main basement space

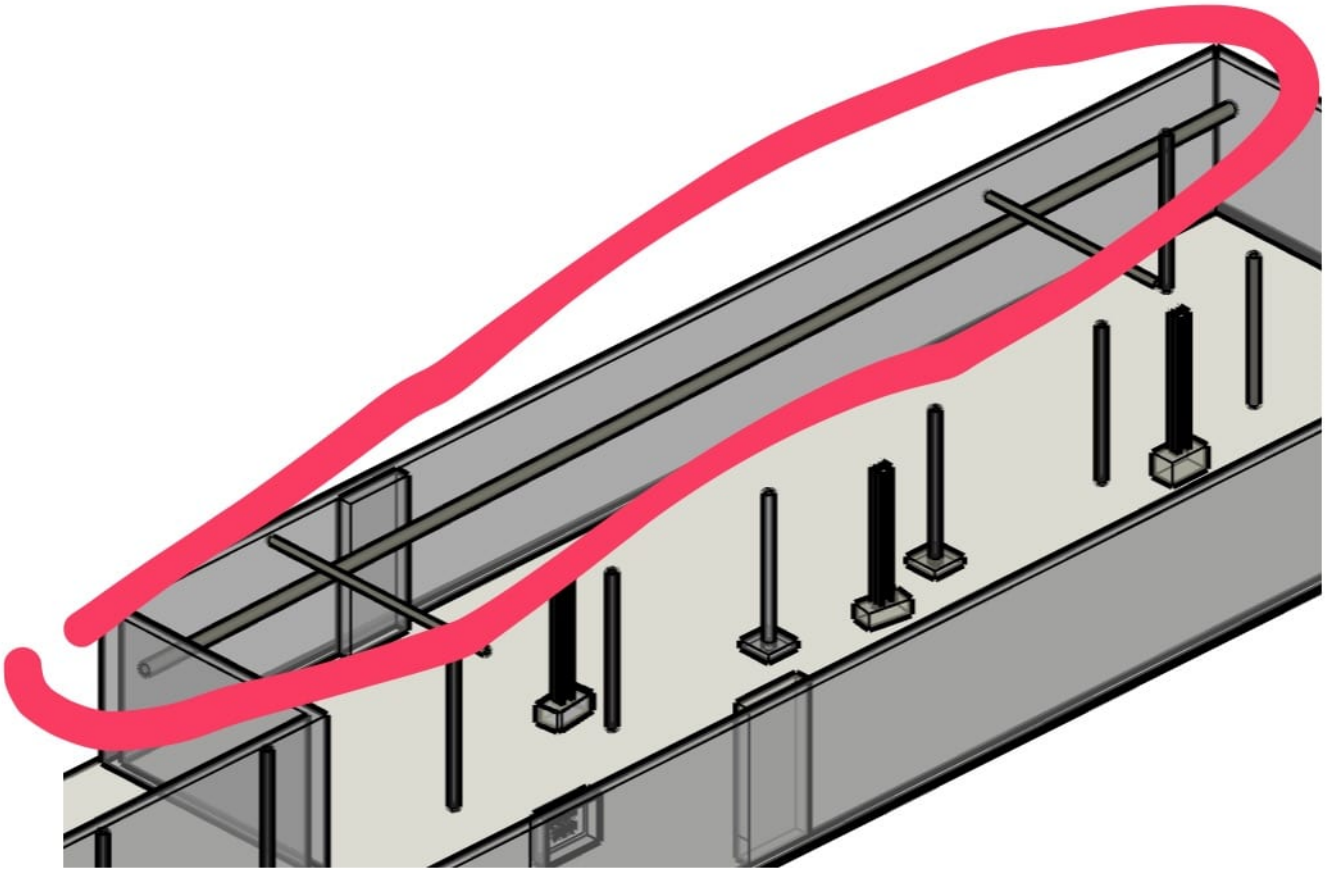



Main drainage pipe runs along wall through main space, smaller steam pipe runs parallel/above from exit of boiler room. At a certain point that steam pipe makes a right angle and crosses to center of room.

Crossing steam pipe is shown in diagram and image above, long parallel steam pipe above drainage run is not shown in diagram.

1st FL sink drain

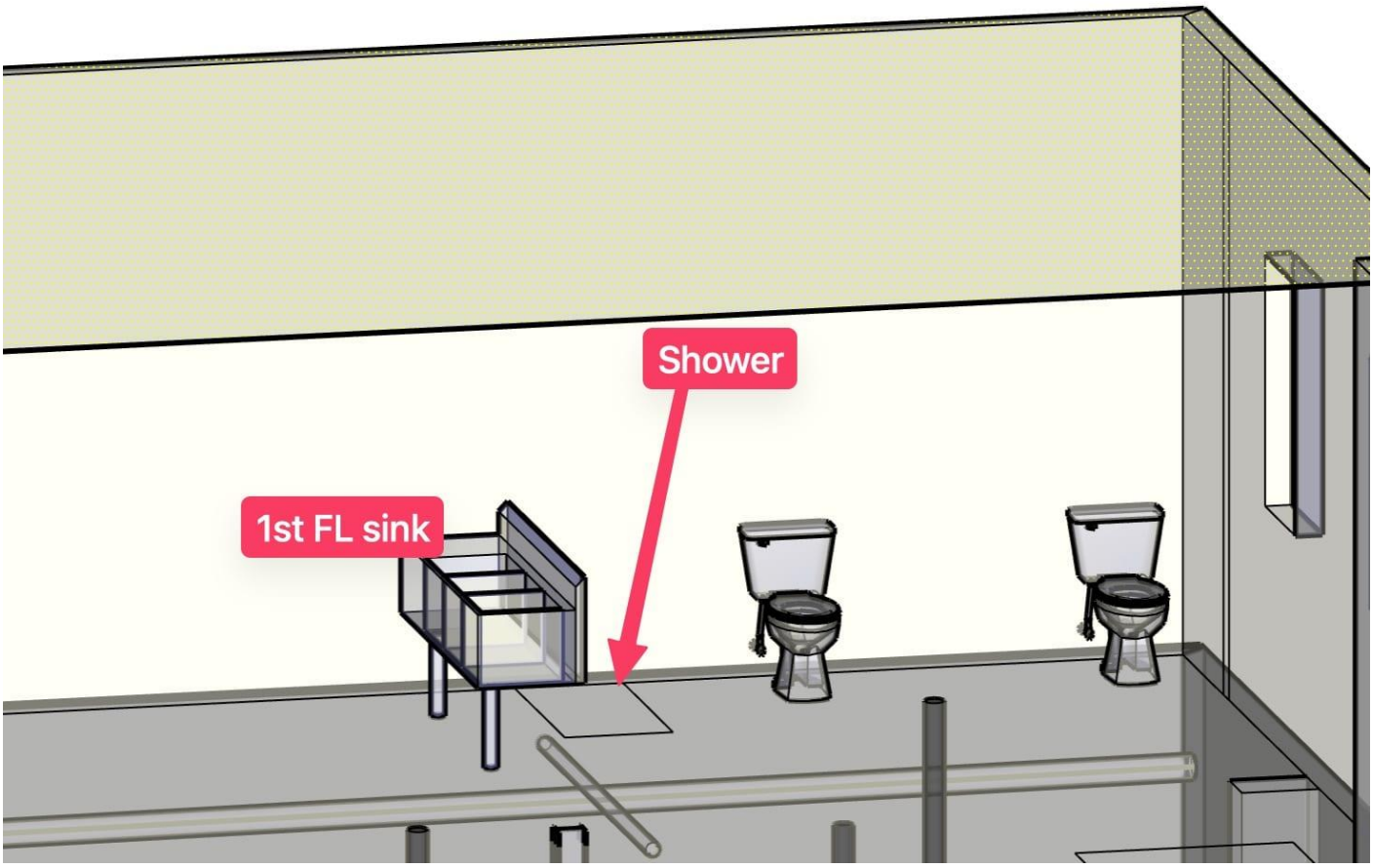

1st floor three section sink routes into bathroom wall



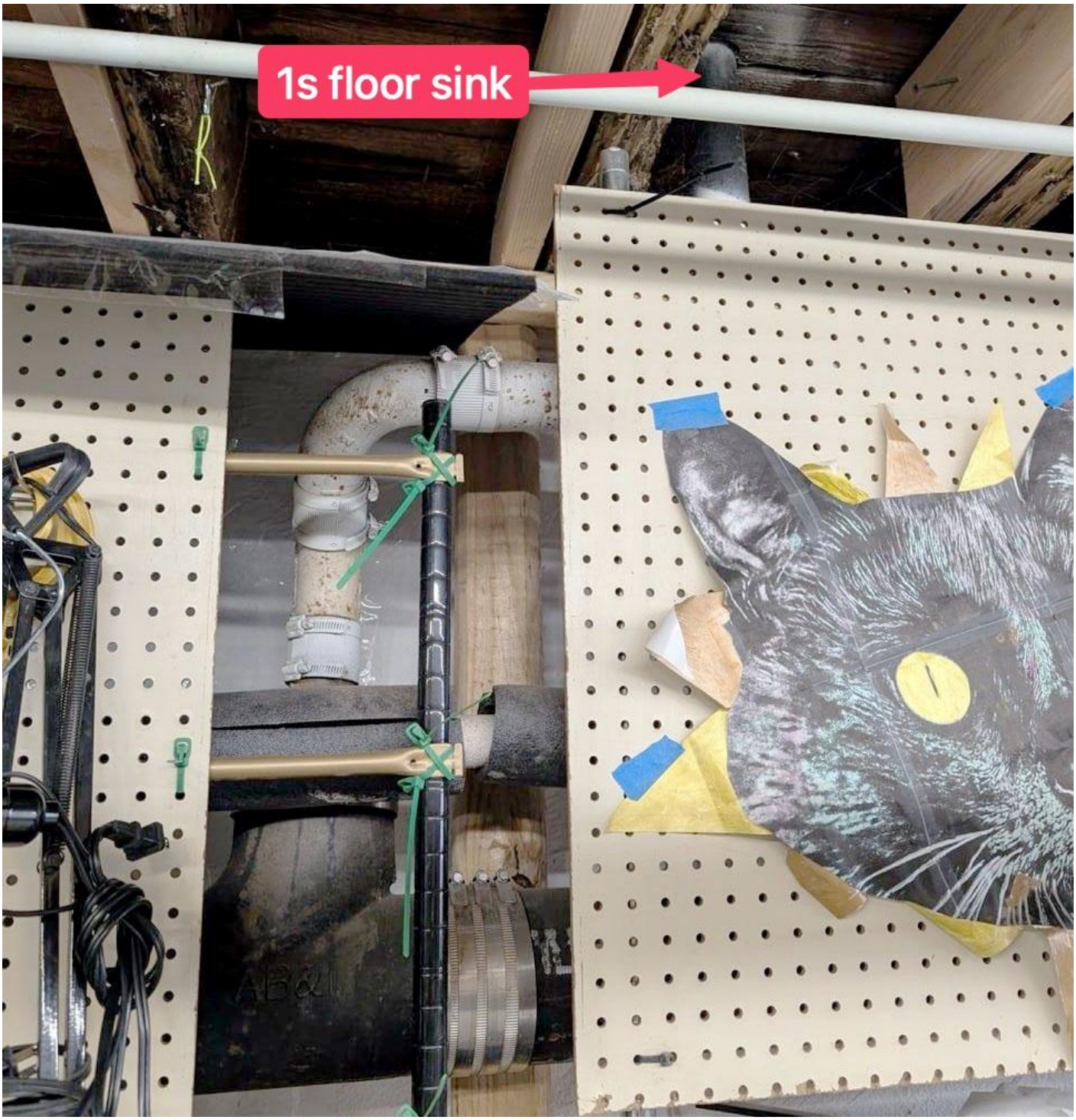
1s floor sink


1st FL shower?
1st FL sink
steam
mains drain

Cluster of plumbing at rear of building

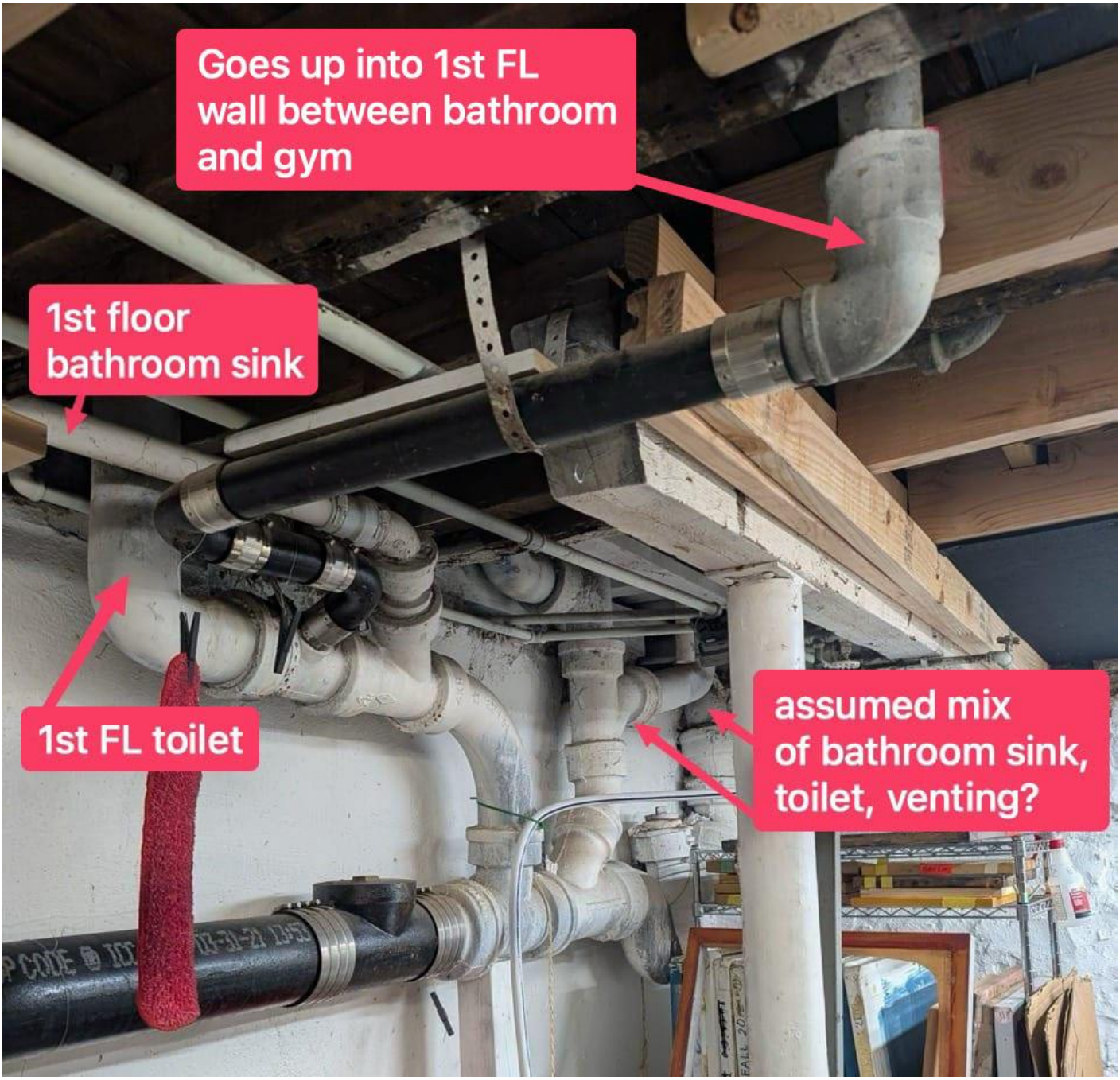

Some other pictures I took that I'm not sure what they're good for explaining





Looking up at the pipe that enters the bathroom/gym wall

1st Floor Maps

1st Floor Floorplan

Click image for full-size

